NUVEQ BLE/NFC/MIRFARE READER

CLOUD-BASED ACCESS CONTROL SYSTEM | MOBILE ACCESS

EP-30NB

NFC

Download on the App Store | GET IT ON Google Play | Download on AppGallery

NEXT-GENERATION ACCESS CONTROL READER

EP-30NB is a next-generation access control reader for use with Bluetooth Mobile Credentials and NFC cards & labels. EP-30NB works best with Nuveq's EP3000C IOT controllers, but also can be used with any third-party access controller.

FEATURES

The EP-30NB combines an elegant design and class leading security features to complement any office or residential premise. With mobile devices becoming a must-have accessory in our daily lives, EP-30NB leverages on Bluetooth mobile credentials to securely access your premise. Industry standard encryption ensures the best security option currently available. Additional support for NFC and Mifare cards and labels offers additional flexibility for your access options. EP30-NB fits over a standard single-gang box, to offer a clean look when aligned with existing electrical fixtures.

CORE TECHNOLOGIES

- Fast & Easy Contactless Solution
- Support Both BLE & NFC
- Remote Management
- AES-256 encryption
- iOS & Andriod Supported

NUVEQ.NET

© 2021 BY NUVEQ SDN BHD | ALL RIGHTS RESERVED

Made In Malaysia

CE

RoHS COMPLIANT

EP-30NB

SPECIFICATIONS

ARM Cortex M4 controller
- 150 MHz core clock
- 128k Program Flash Memory
- 22k SRAM

RealTime Clock
- Super capacitor backup to ensure time keeping
- if reader is switched off.
- Automatic time synchronization from EP3000C controllers.

Serial ports
- 1 RS485 serial port, protected against surges, overvoltage, and ground faults.
- AES 256 encrypted communications to/from EP3000C models.

Inputs
- 1 Arming input to enable credential reading.
- 2 inputs from third party controllers (LED & Buzzer).
- Buffered inputs to provide high noise immunity.

Outputs
- 1 OC output, able to drive an external relay (optional).
- 1 Wiegand output (34bit) to connect to third party
- access controllers

Operation modes
- Bluetooth credential reader, using Nuveq Mobile Access app.
- NFC & Mifare Serial number reader.

Reading range for Bluetooth credentials
- Adjustable from 40cm to 8m

Installation
- Easy installation via RS-485 wiring, compatible with legacy Wiegand wiring, to the EP-3000C access control unit (ACU).

Bluetooth
- Bluetooth Low Energy 5.2.
- Support for multiple concurrent connections.
- Encrypted data exchange.

IArming options
- Always armed (continuous reading)
- Arming by external trigger.
- Arming by touch (capacitive sensing).
- Arming by NFC proximity.
- Arming by optical Time-of-Flight sensor, with variable trigger range from 20cm – 2m

Security features
- AES 256 encryption with code-hopping used throughout all data exchanges.
- Encrypted credential exchange between Nuveq Mobile App & EP30-NB. Random code hopping in every exchange prevents replay attacks.
- Encrypted communications over RS485 between EP30NB & EP3000C controllers. Immune to malicious tapping on serial line.
- Customer code locking, ensuring only valid Bluetooth credentials authorized can be exchanged with reader - no nuisance invalid access events from unauthorized credentials.
- Multiple concurrent Bluetooth connections prevents a single device from causing device lockup.
- Automatic disconnection and blocking of connection attempts from unauthorized devices.
- Mifare & NFC support can be disabled to enforce use of secure Mobile Credentials.

System Compatibility
- Full-featured operation when combined with EP3000-C
- controllers and Nuveq Cloud Access Management Portal.
- Wiegand 34 output allows compatibility with virtually any
- third-party access controllers.

Additional features
- 11 -14.5v DC operation.
- On board buzzer for troubleshooting and event indication.
- Multicolour LED for event and status indication.
- Resettable fuses for protection on incoming power supply.

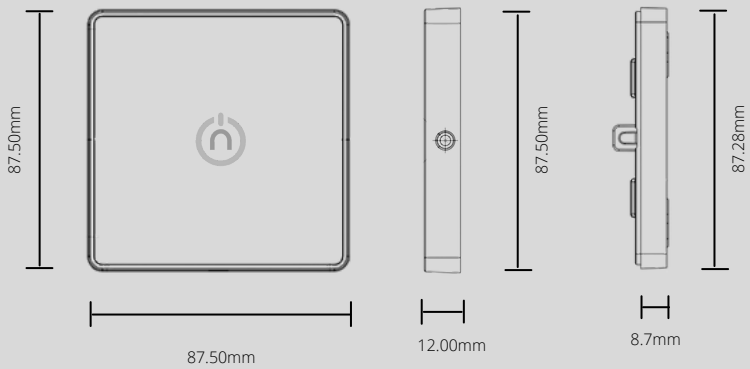

NUVEQ.NET

© 2021 BY NUVEQ SDN BHD | ALL RIGHTS RESERVED

Made In Malaysia